MANEUVERING CONDITION (CAM 3.216)

Elevator Deflection:

25° Up Deflection

15° Down Deflection

W/S = 14.8 @ 1375 lb. Max. Wt.

From Fig. 3-3 (b) CAM 3

For Upward Deflection $K\bar{w}$ = 32.5

For Downward Deflection $K_{\bar{w}}$ = 26.5

Maximum DownLoading:

$\bar{w} = -K_{\bar{w}}\ n/4.4 = -32.5 \times 6.0/4.4 = -44.3$ psf.

$F_t = \bar{w}\ S_t = -44.3 \times 19.2$

$F_t = -$ 850 lb. (Loading per. Fig. 3-8 CAM - 3)

Maximum Up Loading:

$\bar{w} = -K_{\bar{w}}\ n/4.4 = -26.5\ (-6.0)\ /4.4 = 36.2$ psf

$F_t = \bar{w}\ S_t = 36.2 \times 19.2$

$F_t = +$ 694 lb. (Loading Per Fig. 3-8 CAM - 3)

HANDLING CONDITION (CASE 1,2,3)

Elevator deflection:

10° Up Deflection

25° Down Deflection

$\delta/\delta = 10.8/-24.2$ (Ref. Sec.

from Fig. 3-1 (a), Case 1)

For Upward Deflection $\delta_e = 32°$

For Downward Deflection $\delta_e = 36°$

Maximum Upwardwing:

$\delta = \frac{\delta_e}{\delta} \cdot \delta_e = 10.8/32 \times 0.01\delta_e = -0.3$ rad

$P = N \cdot \frac{\delta}{\delta} = 1.4 \times 0.3 \times 10.7$

$= \underline{4.70 \text{ lb}}$ (Loading on Sec. 3-1 (Case - 3)

Maximum Up Loading

$\delta = -\frac{\delta_e}{\delta} \cdot \delta_e = -24.2/(-0.01) \times 36 = 0.3$ rad

$P = N \cdot \delta = 1.4 \times 10.7$

$P_1 = \underline{15.0 \text{ lb}}$ (Loading for Fig. 3-1 (Case - 3)

ANGULAR ACCELERATION LOADS (CAM 3.216c)

V_d = 251 mph. q = 161.5 psf. (page 35)

1 = 18.5 ft.

1/v = 18.5/251 = .0737 then T/w = .20 (Fig. 3-4, CAM 3)

No.	LOADING CONDITION	Most Fwd.	Fwd. Gross	Aft Gross
1	w	1190	1375	1375
2	$(Z_t - Z_{cg})$ (pages 35 to 37)	.533	.550	.594
3	$(d - X_{cg})$ (pages 35 to 37)	10.5	10.3	10.0
4	n	1.0	1.0	1.0
5	F_{nw} (est.)	1730	1899	1850
6	C_{nw} = .0107 (5)/q = 6.65 x 10^{-5} x (5)	.115	.126	.123
7	C_c (page 32)	.017	.019	.018
8	F_{cw} = 93.3 x (7) x q = 15080 x (7)	256	286	272
9	M_{ac} = -26.2 x q =	-4230	-4230	-4230
10	M_f = -3.73 x q =	-602	-602	-602
11	T = 34.400/v =	137	137	137
12	X_{cg} (page 35 to 37)	-.383	-.200	.141
13	Z_{cg} (page 35 to 37)	.192	.175	.141
14	$F_t = \frac{-(13)(8) - (2)(11) + (9) + (10) + (12)(5)}{(3)}$	-540	-524	-475
15	F_{na} = (1) x (4)	1190	1375	1375
16	F_{nw} = (15) - (14) (check (5))	1730	1899	1850
17	$F_t = T/_w$ x (1) = .20 x (1)	238	275	275
18	F_t (down Load) = (14) - (17)	-772	-792	-743
19	F_t (Up Load) = (14) + (17)	-296	-242	-193

DOWN LOAD DISTRIBUTION PER FIG. 3-8 CAM 3

UP LOAD DISTRIBUTION PER FIG. 3-9 CAM 3

GUST LOADS CAM 3.217

BALANCING TAIL LOADS AT V_c

V_c = 162 mph. q = 28.2 psf. (page 35)

No.	LOADING CONDITION	Most FWD.	FWD. GROSS	AFT GROSS
1	w	1190	1375	1375
2	$(Z_t - Z_{cg})$ (page 35 to 37)	.533	.550	.594
3	$(d - X_{cg})$ (page 35 to 37)	10.5	10.3	10.0
4	n	1.0	1.0	1.0
5	F_{nw} (est.)	1336	1504	1458
6	$C_{nw} = .0107\,(5)/q = 3.80 \times 10^{-4}\,(5)$	.507	.572	.554
7	C_c (page 32)	.006	.008	.007
8	$F_{cw} = 93.3 \times (7) \times q = 2630 \times (7)$	16	21	18
9	$M_{ac} = -26.2\ q =$	-738	-738	-738
10	$M_f = -3.73\ q =$	-105	-105	-105
11	$T = 34400/v =$	212	212	212
12	X_{cg} (page 35 to 37)	-.383	-.200	.141
13	Z_{cg} (page 35 to 37)	.192	.175	.141
14	$F_t = \dfrac{-(13)(8) - (2)(11) + (9) + (10) + (12)(5)}{(3)}$	-146	-129	-83
15	$F_{na} = (1) \times (4)$	1190	1375	1375
16	$F_{nw} = (15) - (14)$ (check (5))	1336	1504	1458

GUST LOADS CONT'D.

BALANCING TAIL LOADS AT V_f (FLAPS EXTENDED)

No.	LOADING CONDITION	MOST FWD.	FWD. GROSS	AFT GROSS
1	V_f (mph)	95	104	104
2	q (page 44)	23.1	27.7	27.7
3	w	1190	1375	1375
4	$(Z_t - Z_{cg})$ (page 44 to 45)	.533	.550	.594
5	$(d - X_{cg})$ (page 44 to 45)	10.5	10.3	10.0
6	n	1.0	1.0	1.0
7	F_{nw} (est)	1395	1621	1574
8	C_{nw} = .0107 (7) / (2)	.645	.623	.608
9	C_c (page 32)	.155	.154	.153
10	F_{cw} = 93.3 x (9) x (2)	335	398	410
11	M_{ac} = -67.2 x (2)	-1550	-1860	-1860
12	M_f = -3.73 x (2)	-86	-103	-103
13	T = 34400/ (1)	362	331	331
14	X_{cg} (page 44 to 45)	-.383	-.200	.141
15	Z_{cg} (page 44 to 45)	.192	.175	.141
16	$F_t = \frac{-(15)(10) - (4)(13) + (11) + (12) + (14)(7)}{(5)}$	-205	-246	-199
17	F_{na} = (3) x (6)	1190	1375	1375
18	F_{nw} = (17) - (16) (check (5))	1395	1621	1574

GUST LOADS - CONT'D.

HORIZONTAL TIAL LIFT CURVE SLOPE:

ASSUME: $S_t = 19.2 \ f_t^2$

$b_t = 7.61 \ f_t$ (page 50)

$a = .0833$ per degree (page 17)

$a_{ot} = .106$ per degreee (Ref. 2) 65-012 Airfoil

$A_t = b_t^2/S_t = (7.61)^2/19.2 = 3.02$

$f = .998$ (Fig. 2-55, Ref. 4)

$a_t = f \, a_{ot} \Big/ \left[1 + (57.3 \, a_{ot}/\pi \, A_t)\right]$ (page 85, Ref. 4)

$a_t = .998 \times .106 \Big/ \left[1 + (57.3 \times .106/\pi \times 3.02)\right]$

$a_t = .0645$ per degree

INCREMENTAL TAIL LOAD DUE TO GUSTS (CAM -3.217-c)

1) MOST FORWARD WEIGHT OF 1190 lb. @ V_d

$V_d = 251$ mph. (page 16)

$K = .945$ (page 24)

$U = 15$ fps (CAM -3.217-b.)

$\Delta t = 0.1 \, K \, U \, V \, S_t \, a_t \left[1 - 36 \, a/A\right]$

$\Delta t = 0.1 \times .945 \times 15 \times 251 \times 19.2 \times .0645 \left[1 - 36 \times .0833/5.83\right]$

$\Delta t =$ 214 lb.

2) MOST FOWARD WEIGHT OF 1190 lb. @ V_c

$V_c = 162$ mph. (page 16)

$U = 30$ fps. (CAM -3.217-a)

$t = 0.1 \, K \, U \, V \, S_t \, a_t \left[1 - 36 \, a/A\right]$

$\Delta t = 0.1 \times .945 \times 30 \times 162 \times 19.2 \times .0645 \left[1 - 36 \times .0833/5.83\right]$

$\Delta t =$ 276 lb.

GUST LOADS - CONT'D.

3) MOST FORWARD WEIGHT OF 1190 lb. @ V_f

V_f = 95 mph. (page 16)

U = 15 fps. (CAM -3.217-b)

$\Delta t = 0.1\ K\ U\ V\ S_t\ a_t \left[1 - 36\ a/A\right]$

$\Delta t = 0.1 \times .945 \times 15 \times 95 \times 19.2 \times .0645 \left[1 - 36 \times .0833/5.83\right]$

Δt = 81 lb.

4) GROSS WEIGHT OF 1375 lb. @ V_d

V_d = 251 mph.

K = .980 (page 18)

U = 15 fps. (CAM -3.217-b)

$\Delta t = 0.1\ K\ U\ V\ S_t\ a_t \left[1 - 36\ a/A\right]$

$\Delta t = 0.1 \times .980 \times 15 \times 251 \times 19.2 \times .0645 \left[1 - 36 \times .0833/5.83\right]$

Δt = 221 lb.

5) GROSS WEIGHT OF 1375 lb. @ V_c

V_c = 162 mph. (page 16)

U = 30 fps. (CAM 03.217-a)

$\Delta t = 0.1\ K\ U\ V\ S_t\ a_t \left[1 - 36\ a/A\right]$

$\Delta t = 0.1 \times .980 \times 30 \times 162 \times 19.2 \times .0645 \left[1 - 36 \times .0833/5.83\right]$

Δt = 287 lb.

6) GROSS WEIGHT OF 1375 lb. @ V_f

V_f = 104 mph. (page 16)

U = 15 fps. (CAM -3.217-b)

$\Delta t = 0.1\ K\ U\ V\ S_t\ a_t \left[1 - 36\ a/A\right]$

$\Delta t = 0.1 \times .980 \times 15 \times 104 \times 19.2 \times .0645 \left[1 - 36 \times .0833/5.83\right]$

Δt = 92 lb.

GUST LOADS - CONT'D.

MOST FORWARD LOADING WEIGHT = 1190 lb.

No.	AIRSPEED	V_d = 251	V_c = 162	V_f = 95
1	BALANCING TAIL LOAD (page 55 to 56)	-540	-146	-205
2	Δt (page 55 to 56)	214	276	81
3	F_t (down) 1 - 2	-754	-422	-286
4	F_t (up) 1 + 2	-326	130	-124

LOAD DISTRIBUTION PER FIG. 3-9, CAM -3

FORWARD GROSS WEIGHT = 1375 lb.

No.	AIRSPEED	V_d = 251	V_c = 162	V_f = 104
1	BALANCING TAIL LOAD (page 55 to 56)	-524	-129	-246
2	Δt (page 55 to 56)	221	287	92
3	F_t (down) 1 - 2	-745	-410	-338
4	F_t (up) 1 + 2	-303	158	-154

LOAD DISTRIBUTION PER FIG. 3-9, CAM-3

AFT GROSS WEIGHT = 1375 lb.

No.	AIRSPEED	V_d = 251	V_c = 162	V_f = 104
1	BALANCING TAIL LOADS (page 55 to 56)	-475	-83	-199
2	Δt (page 55 to 56)	221	287	92
3	F_t (down) 1 - 2	-697	-370	-291
4	F_t (up) 1 + 2	-254	204	-107

LOAD DISTRIBUTION PER FIG. 3-9, CAM - 3

CRITICAL LOADS SUMMARY

LOADING CONDITION	LOAD (lb)	DISTRIBUTION Per CAM -3	Ref. Page
BALANCING FLAP UP	+39 -760	FIG. 3-7	50
BALANCING FLAP DOWN	-277	FIG. 3-7	44
MANEUVERING	+694 -850	FIG. 3-8	51
GUST	+204 -754	FIG. 3-9	57

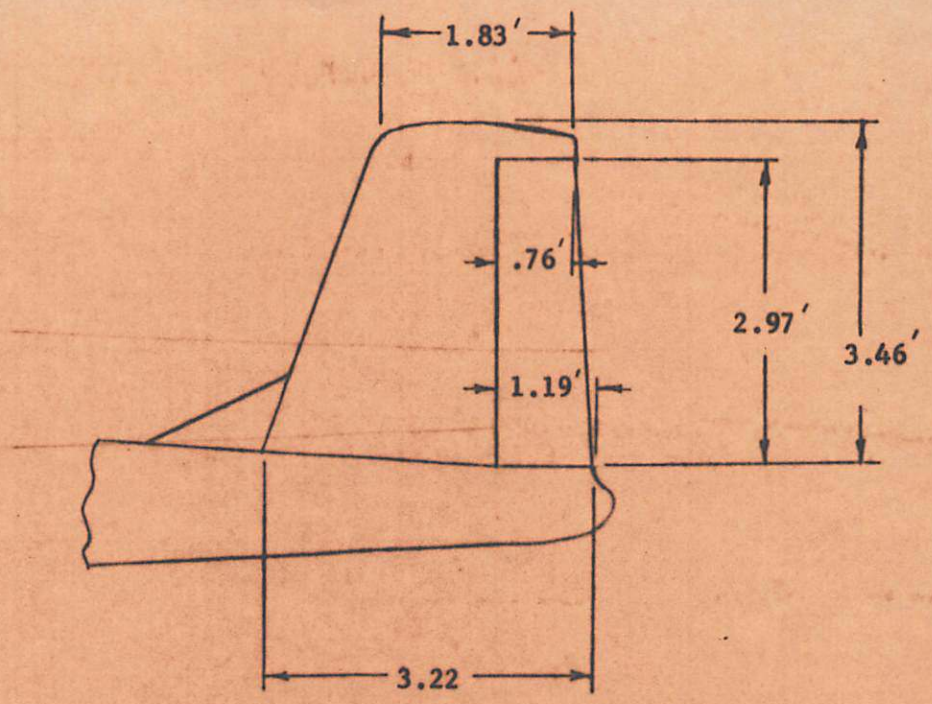

VERTICAL STABILIZER AREA	5.3 ft.^{2}
RUDDER AREA	2.9 ft.^{2}
TOTAL = S_V =	8.2 ft.^{2}

MANEUVERING AIRLOADS (CAM 3.219)

a) UNACCELERATED FLIGHT, MAXIMUM RUDDER DEFLECTION:

ASSUME: $\delta_r = 25^\circ$

w/s = 14.8 psf.

$K\bar{w} = 32.5$ (Fig. 3-3, CAM -3)

$\bar{w} = K\bar{w}\frac{n}{4.4} = 32.5\left(\frac{6.0}{4.4}\right) = 44.3$ psf.

VERTICAL TAIL LOAD = $\bar{w}\,S_V = 44.3 \times 8.2 =$ 364 lb.

LOADING DISTRIBUTION PER FIG. 3-8, CAM - 3

b) 15° SIDESLIP, MAXIMUM 25° AIDING RUDDER

$K\bar{w} = 23.5$ (Fig. 3-3, CAM-3)

$\bar{w} = K\bar{w}\frac{n}{4.4} = 23.5\left(\frac{6.0}{4.4}\right) = 32.1$ psf

VERTICAL TAIL LOAD = $\bar{w}\ S_v$ = 32.1 x 8.2 = 263 lb.

LOAD DISTRIBUTION PER FIG. 3-7, CAM-3.

c) 15° SIDESLIP, NEUTRAL RUDDER

$K\bar{w}$ = 34.5 (Fig. 3-3, CAM-3)

$\bar{w} = K\bar{w}\ \frac{n}{4.4} = 34.5\ \left(\frac{6.0}{4.4}\right) = 47.0$ psf

VERTICAL TAIL LOAD = $\bar{w}\ S_v$ = 47.0 x 8.2 = 385 lb.

LOAD DISTRIBUTION PER FIG. 3-9, CAM-3

GUST LOADS (CAM 3.220)

ASSUME: V_c = 162 mph (page 16)

W = 1375 lb. (page 12)

U = 30 fps (CAM 3.220 a.)

b_v = 3.46 ft.

a_{ov} = .106 per degree (Ref. 2) 65-012 Airfoil

$A_v = b_v^2/S_v = (3.46)^2 / 8.2 = 1.46$

f = .998 (Fig. 2-55, Ref. 4)

$a_v = fa_{ov} / \left[1 + (57.3\ a_{ov}/\pi A_v)\right]$ (page 85, Ref. 4)

$a_v = (.998)\ (.106) / \left[1 + (57.3 \times .106/\pi \times 1.46)\right]$

a_v = .0455 per degree

Converting to radians gives:

$m_v = 57.3\ a_v = 57.3 \times .0455 = 2.61$ per rad.

$K = 1.33 - 4.5/\ (W/S_v)^{3/4}$ (CAM 3.220-b)

$K = 1.33 - 4.5/\ (1375/8.2)^{3/4}$

K = 1.23

GUST LOADS - CONT'D.

$\bar{w} = K\ U\ V\ m/575$ (CAM 3.220-b)

$\bar{w} = 1.23 \times 30 \times 160 \times 2.61/575$

$\bar{w} = 27.2$ psf.

VERTICAL TAIL LOADS = $\bar{w}\ S_V = 27.2 \times 8.2 =$ 223 lb.

LOADING DISTRIBUTION PER FIG. 3-9, CAM-3

CRITICAL VERTICAL TAIL LOADS SUMMARY

LOADING CONDITION	LOAD (lb)	DISTRIBUTION PER CAM-3	Ref. PAGE
UNACCELERATED FLIGHT, MAXIMUM RUDDER DEFLECTION	364	FIG. 3-8	59
15° SIDESLIP, MAXIMUM 25° AIDING RUDDER	263	FIG. 3-7	60
15° SIDESLIP, NEUTRAL RUDDER	385	FIG. 3-9	60
GUST	223	FIG. 3-9	61

AILERON LOADS CAM 3-222

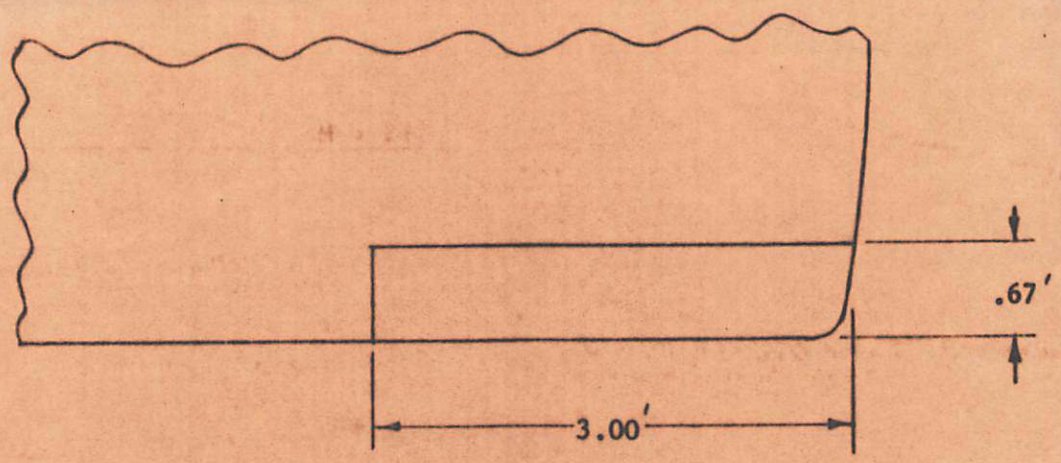

$S_a = .67 \times 3.00 = 2.01 \text{ ft.}^2$

FOR $W/S = 14.8$ psf.

$K\bar{w} = 30.0$ (FIG. 3-3, CAM-3)

$\bar{w} = K\bar{w} \frac{n}{4.4} = 30.0 \frac{6.0}{4.4} = 41.0$ psf.

AILERON FORCE PER SIDE $= \bar{w} S_a = 41.0 \times 2.01 =$ 82.4 lb.

LOAD DISTRIBUTION PER FIG. 3-10, CAM-3

AERODYNAMIC BALANCE CONSERVATIVELY NEGLECTED.

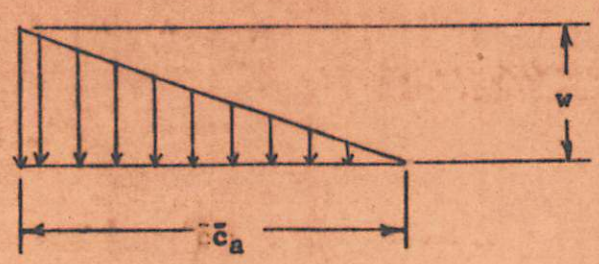

AILERON HINGE MOMENT PER SIDE $= F_a \bar{C}_a/3$

$= 82.4 \times .67/3$

$=$ 18.4 ft-lb.

ELEVATOR LOADS

THE MAXIMUM ELEVATOR LOAD OCCURS AT THE MAXIMUM HORIZONTAL TAIL LOAD FOR THE 30° UP ELEVATOR CASE, WITH A LOAD DISTRIBUTION PER FIG. 3-8, CAM 3. (See page 58)

F_t = -850 lb,

S_t = 19.2 ft.^{2} (page 50)

b_t = 7.61 ft. (page 50)

S_e = 5.8 ft.^{2} (page 50)

b_e = 5.94 ft. (page 50)

$\bar{c}_{ef}$ = .12 ft.

$\bar{c}_{ea}$ = .86 ft.

$\bar{c}_e = \bar{c}_{ef} + \bar{c}_{ea}$ = .12 + .86 = .98 ft. $\bar{c}_t = S_t/b_t$ = 19.2/7.61 = 2.52 ft.

AVERAGE TAIL LOADING $\bar{w} = F_t/S_t$ = 850/19.2 = 44.3 psf.

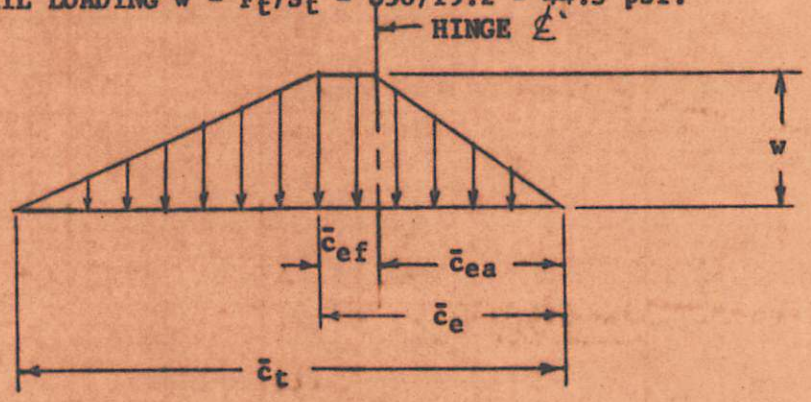

$$\bar{w}\bar{c}_t = w\,\bar{c}_{ef} + \frac{w}{2}\,\bar{c}_{ea} + \frac{w}{2}\,(\bar{c}_t - \bar{c}_e)$$

$$w = \frac{2\,\bar{w}\,\bar{c}_t}{2\,\bar{c}_{ef} + \bar{c}_{ea} + \bar{c}_t - \bar{c}_e} = \frac{2\,\bar{w}\,\bar{c}_t}{\bar{c}_{ef} + \bar{c}_t}$$

$$w = \frac{2 \times 44.3 \times 2.52}{.12 + 2.52} = 84.7 \text{ psf.}$$

ELEVATOR LOADS - CONT'D.

AVERAGE ELEVATOR LOAD PER FOOT:

$$\bar{w}_e \bar{c}_e = w \bar{c}_{ef} + \frac{w}{2} \bar{c}_{ea}$$

$$\bar{w}_e \bar{c}_e = 84.7 \times .12 + \frac{84.7 \times .86}{2} = 10.15 + 36.40 = 46.55 \text{ lb/ft.}$$

TOTAL ELEVATOR LOAD = $\bar{w}_e \bar{c}_e b_e = 46.55 \times 5.94 =$ 277 lb.

AVERAGE ELEVATOR HINGE MOMENT PER FOOT:

$$\frac{H_e}{b_e} = \frac{w}{2} \bar{c}_{ea} \left(\frac{\bar{c}_{ea}}{3} \right) - w \bar{c}_{ef} \left(\frac{\bar{c}_{ef}}{2} \right) = \frac{36.40 \times .86}{3} - \frac{10.15 \times .12}{2}$$

$$\frac{H_e}{b_e} = 10.42 - .61 = 9.81 \ \frac{\text{ft - lb}}{\text{ft}}$$

TOTAL ELEVATOR HINGE MOMENT:

$$H_e = \frac{H_e}{b_e} (b_e) = 9.81 \times 5.94 = 58.3 \text{ ft - lb.}$$

RUDDER LOAD

THE MAXIMUM RUDDER LOAD OCCURS AT THE VERTICAL TAIL LOAD FOR THE 25° RUDDER DEFLECTION, WITH A LOAD DISTRIBUTION OF FIG. 3-8, CAM-3. (See page 59)

$\bar{w}$ = 44.3 psf (page 59)

S_v = 8.2 ft.^{2} (page 59)

S_r = 2.9 ft.^{2} (page 59)

$\bar{c}_r$ = .98 ft. (page 59)

$\bar{c}_{rf}$ .12 ft.

$\bar{c}_{ra}$ .86 ft.

b_v = 3.46 ft. (page 59)

b_r = 2.97 ft. (page 59)

$\bar{c}_v = S_v/b_v = 8.2/3.46 = 2.37$ ft.

RUDDER LOAD - CONT'D.

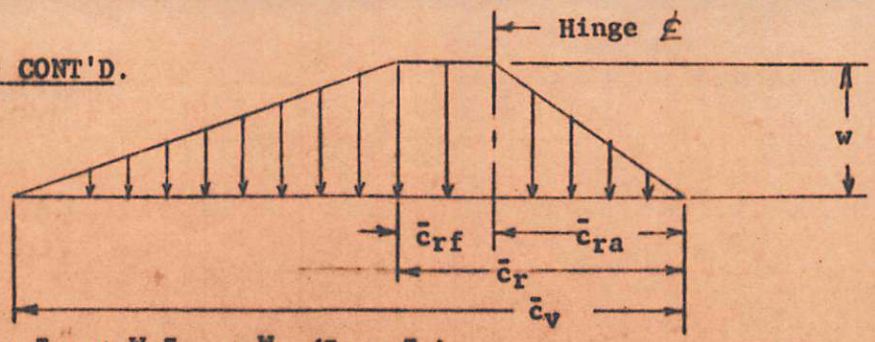

$$\bar{w}\,\bar{c}_v = w\,\bar{c}_{rf} + \frac{w}{2}\,\bar{c}_{ra} + \frac{w}{2}\,(\bar{c}_v - \bar{c}_r)$$

$$w = \frac{2\,\bar{w}\,\bar{c}_v}{2\,\bar{c}_{rf} + \bar{c}_{ra} + \bar{c}_v - \bar{c}_r} = \frac{2\,\bar{w}\,\bar{c}_v}{\bar{c}_{rf} + \bar{c}_v}$$

$$w = \frac{2 \times 44.3 \times 2.37}{.12 + 2.37} = 84.3 \text{ psf.}$$

AVERAGE RUDDER LOAD PER FOOT:

$$\bar{w}_r\,\bar{c}_r = w\,\bar{c}_{rf} + \frac{w}{2}\,\bar{c}_{ra}$$

$$\bar{w}_r\,\bar{c}_r = 84.3 \times .12 + \frac{84.3 \times .86}{2} = 10.11 + 36.25 = 46.36 \text{ lb/ft.}$$

TOTAL RUDDER LOAD = $\bar{w}_r\,\bar{c}_r\,b_r = 46.36 \times 2.97 =$ <u>138. lb.</u>

AVERAGE RUDDER HINGE MOMENT PER FOOT:

$$\frac{H_r}{b_r} = \frac{w}{2}\,\bar{c}_{ra}\,\left(\frac{\bar{c}_{ra}}{3}\right) - w\,\bar{c}_{rf}\,\left(\frac{\bar{c}_{rf}}{2}\right) = \frac{36.25 \times .86}{3} - \frac{10.11 \times .12}{2}$$

$$\frac{H_r}{b_r} = 10.40 - .60 = 9.80\ \frac{\text{ft-lb.}}{\text{ft.}}$$

TOTAL RUDDER HINGE MOMENT:

$$H_r = \frac{H_r}{b_r}\,(b_r) = 9.80 \times 2.97 = \underline{29.1 \text{ ft-lb.}}$$

GROUND GUST CONDITIONS CAM 3.233

$$\text{GROUND GUST SPEED} = 10\sqrt{W/S} + 10 = 10\sqrt{14.8} + 10 = 48.4 \text{ mph.}$$

$$q = \rho/2 \times V^2 = .002378\ (1.467 \times 48.4)^2/2 = 5.97 \text{ psf.}$$

$$H = K\ C\ S\ q$$

No.		AILERON	ELEVATOR	RUDDER
1	K (CAM 3.233)	± .75	± .75	±.75
2	S (page 50 to 62) (ft^2)	4.02	5.11	2.56
3	C (page 50 to 62) (ft)	0.67	.86	.86
4	H=5.97 x ① x ② x ③ (ft-lb.)	12.0	19.7	9.9
5	CONTROL HORN ARM (ft)	0.271	0.208	0.208
6	SYSTEM MECHANICAL ADVANTAGE	10.66: 1	8.32:1	1.61: 1
7	LOAD AT WHEEL/STICK ④ / ⑤ x ⑥ (lb)	4.16	11.4	29.6
8	1.25 x LOAD 1.25 x ⑦	5.2	14.2	37.0

NOTE: THE BD-1 WILL BE MADE WITH EITHER STICK OR WHEEL CONTROL.

THE CONTROL GIVING THE HIGHEST SYSTEM LOADS WILL BE INVESTIGATED.

		AILERON	ELEVATOR	RUDDER
1	HINGE MOMENT (ft-lb)	36.8	58.3	29.1
2	CONTROL HORN ARM (ft)	0.271	0.208	0.208
3	SYSTEM MECHANICAL ADVANTAGE	10.66: 1	8.32:1	1.61:1
4	Load at Wheel/Pedal, 1/2x3 (lb)	12.73	33.7	86.9
5	1.25 x Load, 1.25 x4	15.9	42.1	108.6
6	Max. Pilot Loads, (FIg. 3-11, CAM-3)	67	200	200
7	Min. Pilot Loads, (Fig. 3-11, CAM-3)	40	100	130
8	0.6 x Min. Pilot Loads, (Fig. 3-11, CAM-3)	24	60	78
9	GROUND GUST LOADS (PAGE 66)	5.2	14.2	37.0

DUAL CONTROLS CAM 3.232

THE DUAL CONTROLS ARE DESIGNED USING INDIVIDUAL PILOT LOADS EQUAL TO 75 PERCENT OF THE PRECEEDING CRITICAL LOADS ACTING IN OPPOSITION.

CRITICAL CONTROL SYSTEM LOADS AT CONTROL WHEEL/PEDAL:

AILERON LOAD = 24 lb.

ELEVATOR LOADS = 60 lb.

RUDDER LOAD = 108.6 lb.

THE TRIM TAB IS A FULL FLYING AIRFOIL SURFACE WHICH EXTENDS FROM EACH SIDE OF THE FUSELAGE BELOW THE HORIZONTAL STABILIZER. ASSUME a $\pm 14^\circ$ LIMIT TO THE TAB DEFLECTION.

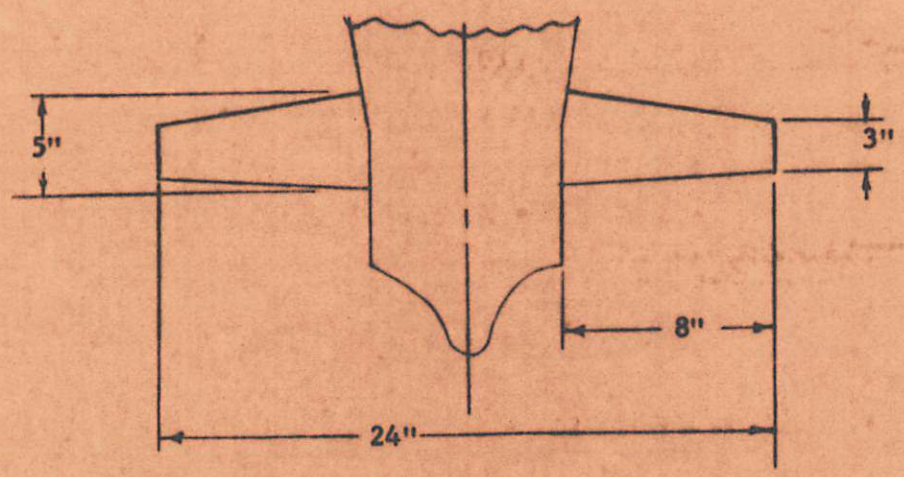

ASSUME: AIRFOIL 63-012

$C_{lmax} = 1.4$

$a_o = .111$

$S_{tt} = 104$ in $= .723$ ft.

$A_{tt} = b^2/S_{tt} = (24)^2/104 = 5.54$

$$a = \frac{a_o}{1+(57.3a_o/A)} = \frac{.111}{1+(57.3 \times .111/ \times 5.54)} = .0813$$

LIFT COEFFICIENT AT 15 CONTROL DEFLECTION :

$C_{ltt} = a_o = .0813 \times 14 = 1.14$

ASSUME MAXIMUM DEELECTION AT V= 162 mph = 238 ft/sec (page 16)

$q = \frac{1}{2} \rho V^2 = \frac{1}{2} \times .002378 (238)^2 = 67.3$ psf

$F_{tt} = C_{ltt}\, q\, S_{tt} = 1.14 \times 67.3 \times 0.723 = 55.5$ lb.

ASSUME A LIFT DISTRIBUTION PROPORTIONAL TO THE TRIM TAB CHORD.

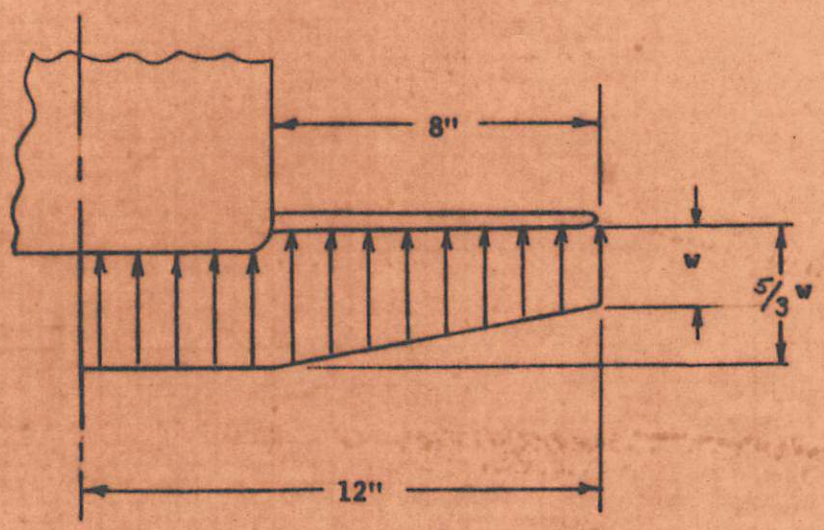

$$\frac{F_{tt}}{2} = \frac{55.5}{2} = 4 \times w + 8 \times \frac{w + w}{2} = 17.33\ w$$

$$w = 1.60\ \text{lb/in}$$

TORQUE EFFECTS - CONTINUED

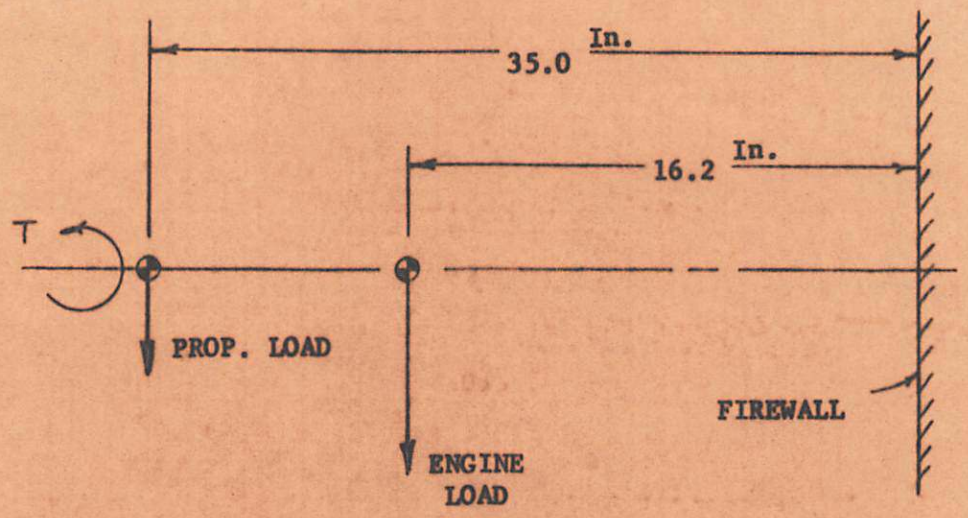

PROPELLER LOAD = n x 22 = 6 x 22 = 132 lb.

ENGINE LOAD = n x 286 = 6 x 286 = 1716 lb.

T = 438 ft-lb.

SIDE LOAD ON ENGINE MOUNT (CAM 3.176)

SIDE LIMIT LOAD FACTOR = $^1/_3$ n = $^1/_3$ x 6.0 = 2.0

PROPELLER SIDE LOAD = 2.0 x 22 = 44 lb.

ENGINE SIDE LOAD = 2.0 x 286 = 572 lb.

ENGINE TORQUE EFFECTS, CAM 3.195

ENGINE IS LYCOMING O-235-C1 PRODUCING MAXIMUM TAKE-OFF POWER OF 115 hp. @ 2800 rpm.

$T = 5252\ P/N = 5252 \times 115/2800 = 216$ ft-lb.

FOR 4 CYLINDER ENGINES MULTIPLY BY 2

$T = 216 \times 2 =$ 432 ft-lb. LIMIT

MAXIMUM CONTINUOUS POWER = 108 hp. @ 2600 rpm.

$T = 5252\ P/N = 5252 \times 108/2600 = 219$ ft-lb.

FOR 4 CYLINDER ENGINE MULTIPLY BY 2

$T = 219 \times 2 =$ 438 ft-lb. LIMIT

SINCE THE MAXIMUM CONTINUOUS TORQUE IS GREATER THAN THE TAKE-OFF POWER TORQUE, THE ENGINE MOUNT LOADING CONDITION OF CAM 3.195 (2) IS MORE CRITICAL THAN THAT OF CAM 3.195 (1).

CAM 3.195 a (2) MAX. CONTINUOUS TORQUE WITH LOADS OF POINT "A"

$T = 438$ ft-lb.

$n = 6.0$

ENGINE WEIGHT = 286 lb.

PROPELLER WEIGHT = 22 lb.

BASIC GEOMETRY

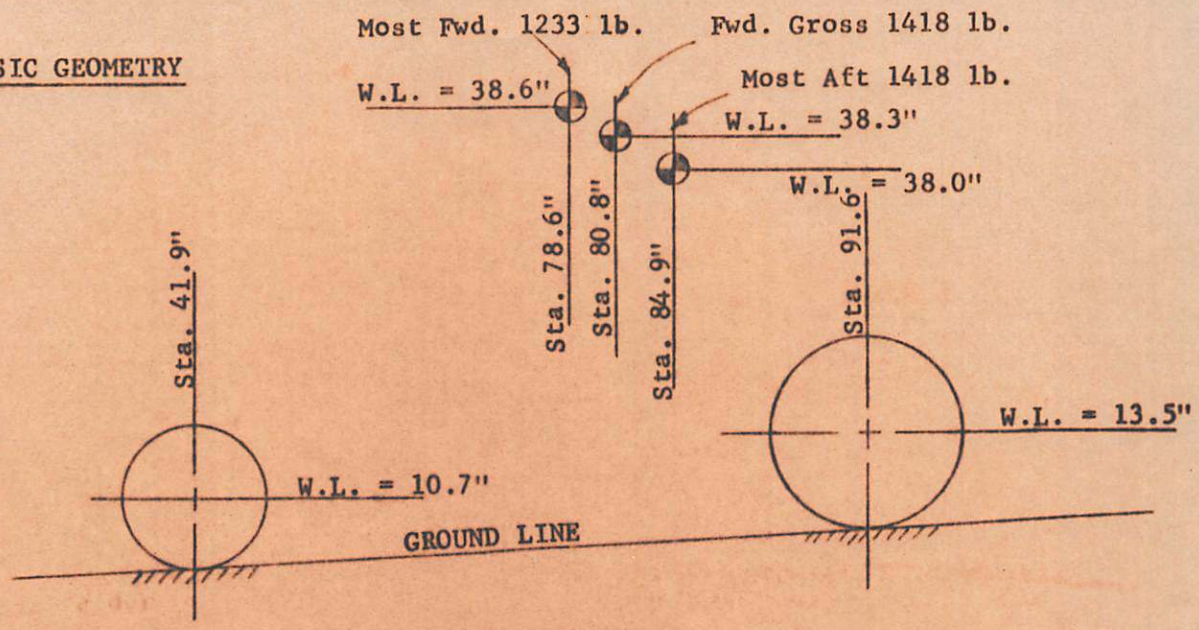

LOADINGS GREATER THAN THOSE OF THE ACROBATIC CONFIGURATION ARE USED IN ANTICIPATION OF GREATER UTILITY LOADINGS.

AIRPLANE DROP HEIGHT

LIMIT DROP HEIGHT CAM 3.353

$W/S = 1418/93.3 = 15.2$ psf

$h = 3.6\ (W/S)^{\frac{1}{2}} = 3.6(15.2)^{\frac{1}{2}} = \underline{14.0 \text{ in.}}$

RESERVE ENERGY DROP HEIGHT CAM 3.355

$h = 1.44\ (14.0) = \underline{20.2 \text{ in.}}$

NOTE: 1) For design assume an airplane limit inertia load factor of n = 3.60 and a ground reaction load factor of (n - L) = 3.00. These load factors are subject to verification by drop tests.

2) K = .25, since W $<$ 3000 lb.

3) Nosewheel tire is 5.00 -5 type III
   Rolling radius = 5.7 in.
   Flat tire radius = 4.1 in.
   Mainwheel tire is 15 x 6.00 -6 type VI
   Rolling radius = 6.2 in.
   Flat tire radius = 4.5 in.

LEVEL LANDING INCLINED REACTIONS CAM 3.245

MOST FORWARD WEIGHT OF 1233 lb.

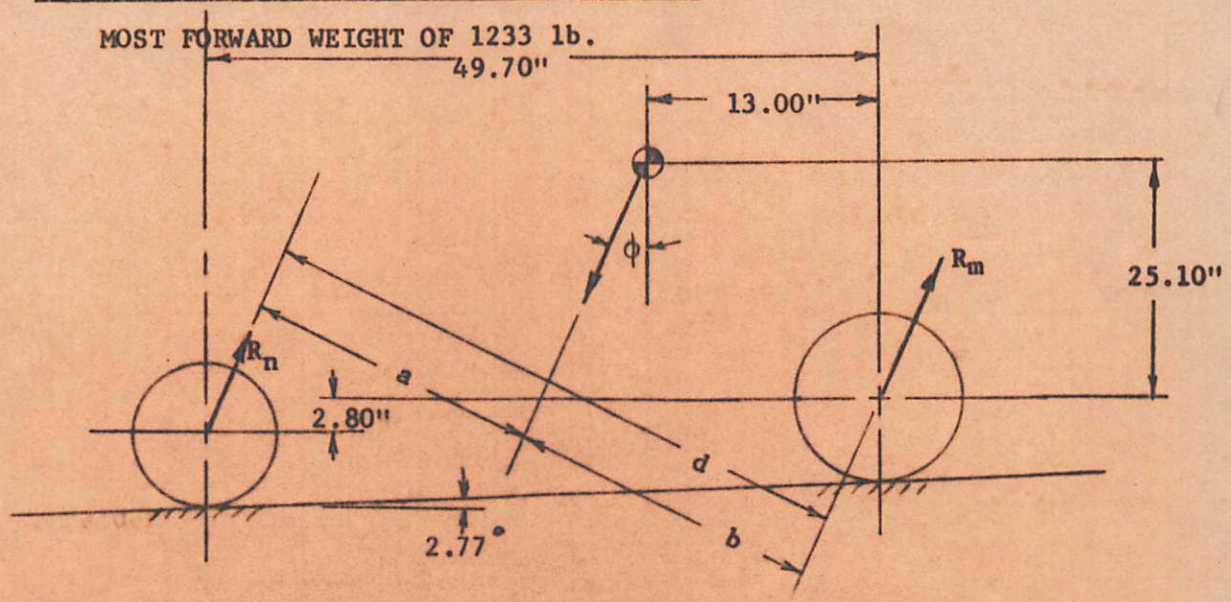

ϕ = tan K - 2.77 = 14.04 - 2.77 = 11.27°

d = [49.70 - 2.80 tan ϕ] cos ϕ = [49.70 - 2.80(.1992)] (.9807) = 48.22 in.

b = [13.00 + 25.10 tan ϕ] cos ϕ = [13.00 + (25.10)(.1992)] (.9807) = 17.67

a = d - b = 48.22 - 17.67 = 30.55 in.

(a/d) = 0.63 (b/d) = 0.37

R_m (Vert.) = (n - L) W (a/d) = 3.0 x 1233 x .63 = 2332 lb./2 wheels

R_m (Drag) = K n W (a/d) = .25 x 3.6 x 1233 x .63 = 700 lb./2 wheels

R_n (Vert) = (n-L) W (b/) = 3.0 x 1233 x .37 = 1370 lb.

R_n (Drag) = K n W (b/d) = .25 x 3.6 x 1233 x .37 = 411 lb.

The above loads are applied at the axles normal and parallel to the ground.

LEVEL LANDING INCLINDED REACTIONS - CONT'D.

FORWARD GROSS WEIGHT OF 1418 lb.

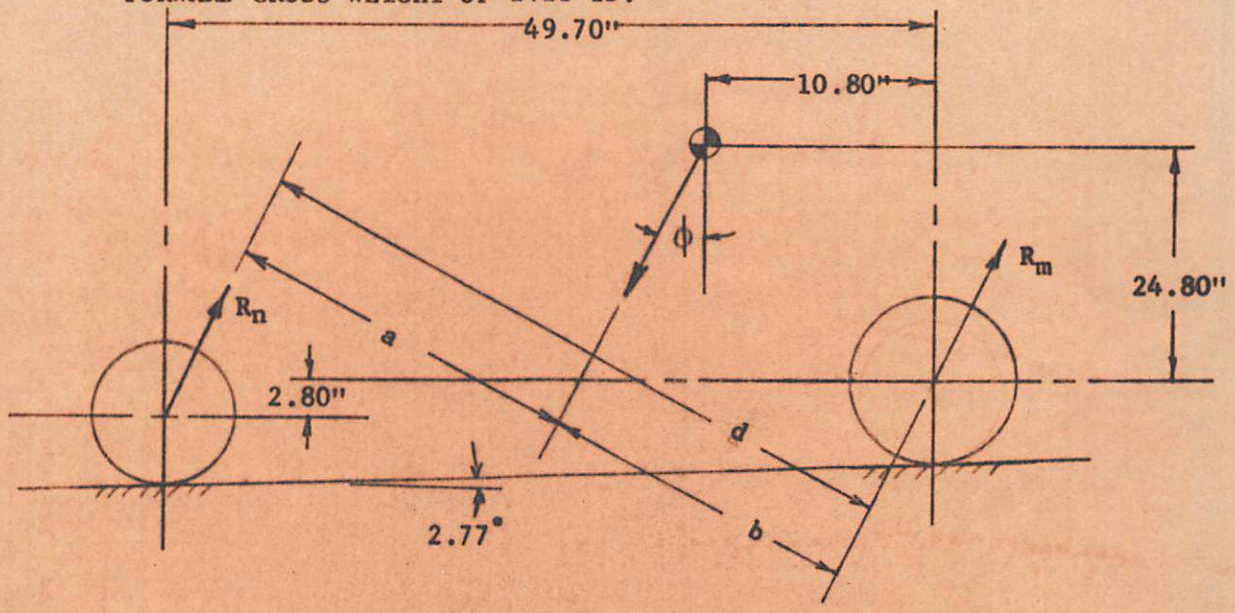

$= \tan K - 2.77 = 14.04 - 2.77 = 11.27$

$d = 48.22$ in. (See page 72)

$b = [10.80 + 24.80 \tan\phi] \cos\phi = [10.80 + 24.80\ (.1992)]\ (.9807) = 15.43$ in.

$a = d - b = 48.22 - 15.43 = 32.79$ in.

$(a/d) = .68 \qquad (b/d) = .32$

R_m = (Vert) = (n-L) W (a/d) = 3.0 x 1418 x .68 = 2892 lb. /2 wheels

R_m = (Drag) = K n W (a/d) = .25 x 3.6 x 1418 x .68 = 867 lb. /2 wheels

R_n = (Vert) = (n-L) W (b/d) = 3.0 x 1418 x .32 = 1360 lb.

R_n = (Drag) = K n W (a/d) = .25 x 3.6 x 1418 x .32 = 409 lb. /2 wheels

The above loads are applied at the axles normal and parallel to the ground

LEVEL LANDING - NOSE CLEAR - CONT'D

FORWARD GROSS C.G. CONDITION OF 1418 lb.

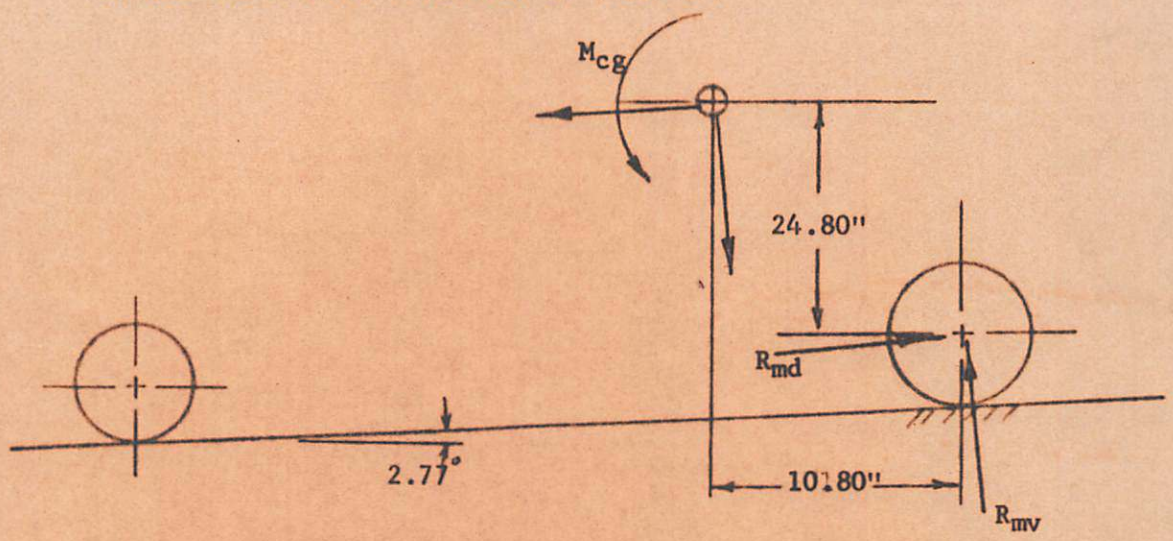

R_m(Vert.) = R_{mv} = (n-L) W = 3.0 x 1418 = 4250 lb/2 wheels

R_m(Drag) = R_{md} = K n W = .25 x 3.6 x 1418 = 1277 lb/2 wheels

NOSE WHEEL REACTIONS = 0

UNBALANCED MOMENT ABOUT C.G. :

M_{cg} = 10.80 (R_{md} x sin 2.77° + R_{mv} x cos 2.77°) + 24.80(R_{md} xcos 2.77° - R_{mv} x sin 2.77°)

M_{cg} = 10.80(1277 x .04833 + 4250 x .9988) + 24.80 (1277 x .9988 - 4250 x .04833)

M_{cg} = 72,940 in-lb. (Nose down)

I_y = 8900 in-lb-sec^2 (estimated)

α_y = M_{cg} / I_y = 72,940 / 8,900 = 8.19 RAD/SEC^2

TAIL DOWN LANDING - CAM 3.246

MOST FORWARD C.G. CONDITION OF 1233 lb.

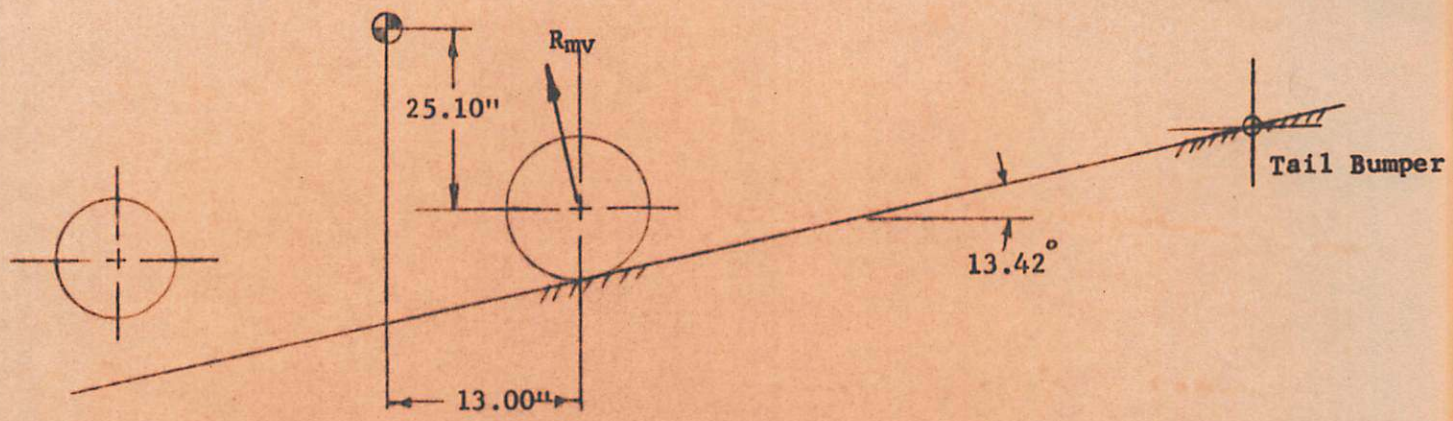

R_m (Vert) = (n-L) W = 3.00 x 1233 = 3699 lb/2 wheels

R_m (Drag) = 0

NOSE WHEEL REACTIONS = 0

UNBALANCED MOMENT ABOUT C.G.

$M_{cg} = R_m \text{ (Vert)} \left[13.00 - 25.10 \tan 13.42\right] \cos 13.42^\circ$

$M_{cg} = 3699 \left[13.00 - 25.10 \times .2385\right] .9727$

$M_{cg} = 25{,}200$ in-lb.

$I_y = 8900$ in-lb-sec.^{2}

$\alpha_y = M_{cg} / I_y = 25{,}200/8900 = 2.83$ rad/sec.^{2}

TAIL DOWN LANDING - CONT'D.

FORWARD GROSS C.G. CONDITION OF 1418 lb.

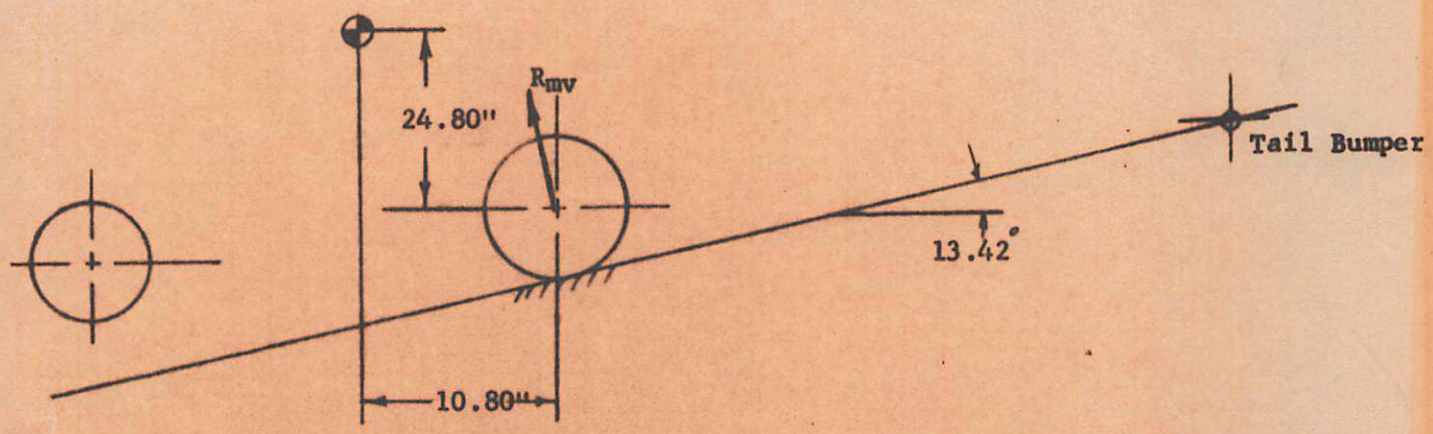

R_m (Vert) = (n-L) W = 3.0 x 1418 = 4250 lb/2 wheels

R_m (Drag) = 0

NOSE WHEEL REACTIONS = 0

UNBALANCED MOMENT ABOUT C.G.

$M_{cg} = R_m \text{ (Vert)} \left[10.80 - 24.80 \tan 13.42^\circ\right] \cos 13.42^\circ$

$M_{cg} = 4250 \left[10.80 - 5.92\right] .9727$

$M_{cg} = 20{,}150$ in-lb.

$I_y = 8900$ in-lb-sec.^{2}

$\alpha_y = M_{cg}/I_y = 20150 / 8900 = 2.26$ Rad/sec^2

ONE WHEEL LANDING CAM 3.247

CRITICAL CONDITION IS FORWARD GROSS ; GEOMETRY SAME AS FOR LEVEL LANDING NOSE CLEAR.

LOAD ON ONE MAIN WHEEL = (TOTAL MAIN WHEEL REACTIONS FOR LEVEL LANDING, NOSE CLEAR) /2

R_m (Vert) One wheel = 4250/2 = 2125 lb.

R_m (Drag) One wheel = 1277/2 = 638 lb.

THE ABOVE LOADS APPLY AT THE AXIL NORMAL AND PARALLEL TO THE GROUND.

UNBALANCED MOMENTS ABOUT C.G.

M_{ycg} = 1/2 (M_{ycg} for level landing nose clear)

M_{ycg} = 1/2 (72,940)

M_{ycg} = 36,470 in.-lb.

α_y = 8.19/2 = 4.10 rad/sec.^{2}

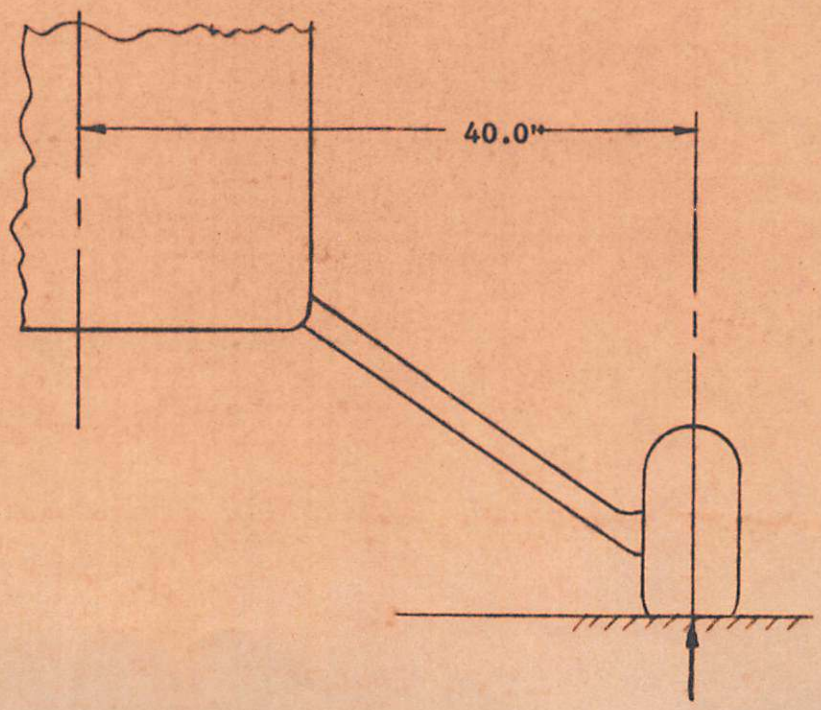

ONE WHEEL LANDING - CONT'D.

$M_{xcg} = R_m$ (Vert) x cos 2.77° x 40.0 + R_m (Drag x sin 2.77° x 40.0

M_{xcg} = 2125 x .9988 x 40.0 + 638 x .04833 x 40.0

M_{xcg} = 86,130 in-lb.

I_x = 7100 in-lb-sec^2 (Estimated)

$\alpha_x = M_{xcg}/I_x$ = 86,130/7100 = 12.1 rad/sec^2

$M_{zcg} = R_m$ (Drag) x cos 2.77° x 40.0 - R_m (Vert) x sin 2.77° x 40.0

M_{zcg} = 638 x .9988 x 40.0 - 2125 x .04833 x 40.0

M_{zcg} = 21,360 in-lb.

I_z = 14,400 in-lb-sec^2 (Estimated)

$\alpha_z = M_{zcg}/I_z$ = 21,360/14,400 = 1.48 rad/sec^2

BRAKED ROLL CAM 3.248

MOST FORWARD WEIGHT OF 1233 LB.

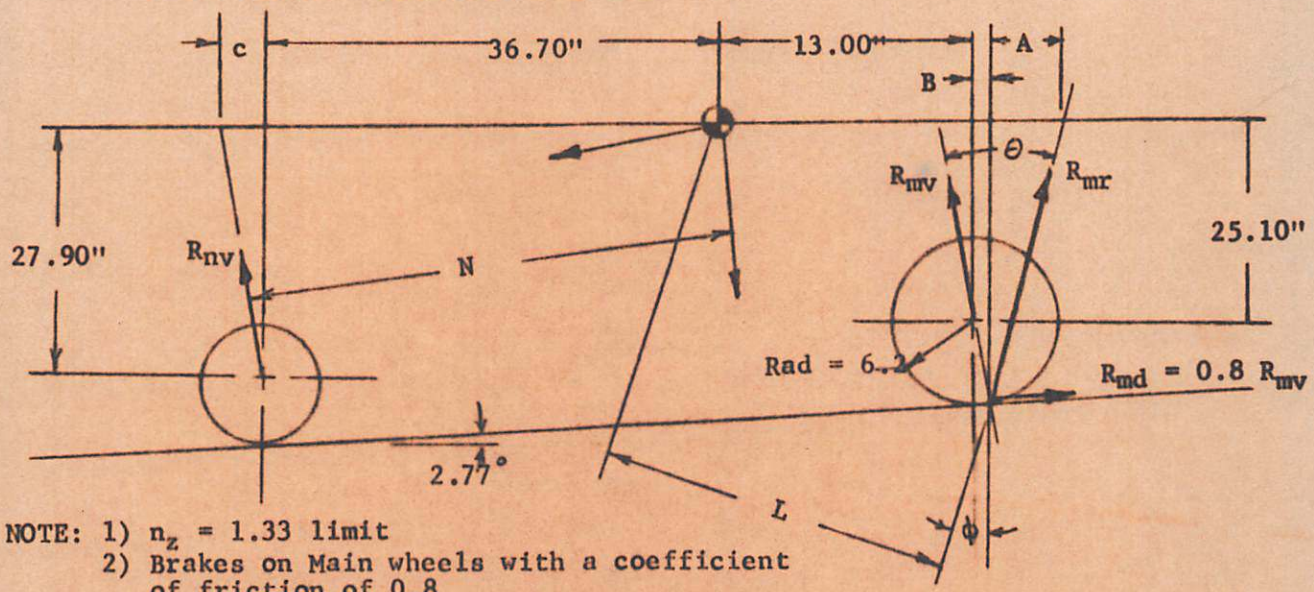

NOTE: 1) n_z = 1.33 limit
2) Brakes on Main wheels with a coefficient of friction of 0.8

$$\theta = \tan^{-1}\frac{R_{md}}{R_{mv}} = \tan^{-1} 0.8 = 38.66^\circ$$

$$\phi = \theta - 2.77^\circ = 38.66^\circ - 2.77^\circ = 35.89^\circ$$

$$B = 6.2 \sin 2.77^\circ = 6.2 \times .04833 = 0.30 \text{ in.}$$

$$A = (25.10 + 6.20 \cos 2.77^\circ) \tan\phi = (25.10 + 6.20 \times .9988).7236 = 22.62 \text{ in.}$$

$$L = (A + B + 13.00) \cos\phi = (22.62 + 0.30 + 13.00)\ .8101 = 29.08 \text{ in.}$$

$$C = 27.90 \tan 2.77^\circ = 27.90 \times .04839 = 1.35 \text{ in.}$$

$$N = (36.70 + c) \cos 2.77^\circ = (36.70 + 1.35)\ .9988 = 38.00 \text{ in.}$$

$$\sum F_v = 0 = n W + R_{mv} + R_{nv}$$

$$1.33 \times 1233 = R_{mv} + R_{nv}$$

$$1641 = R_{mv} + R_{nv} \qquad (1)$$

$$\sum M_{cg} = 0 = LR_{mr} - N R_{nv} = 29.08 R_{mr} - 38.00 R_{nv}$$

$$R_{mr} = 1.306 R_{nv} \qquad (2)$$

BRAKED ROLL - CONT'D.

MOST FOWARD WEIGHT - CONT'D.

BY GEOMETRY:

$$R_{mv} = R_{mr} \cos\theta = .7809\ R_{mr} \quad (3)$$

$$R_{md} = R_{mr} \sin\theta = .6247\ R_{mr} \quad (4)$$

SOLVING EQUATIONS (1), (2), (3) and (4) GIVES:

R_{nv} = 812 lb.

R_{mr} = 1060 lb. /2 WHEELS

R_{mv} = 828 lb. /2 WHEELS

R_{md} = 662 lb. /2 WHEELS

THE ABOVE LOADS ARE APPLIED AS FOLLOWS:

NOSE WHEEL: AT THE AXLE

MAIN WHEELS: VERTICAL LOAD THRU AXLE DRAG LOAD AT THE GROUND

ALL LOADS ARE PERPENDICULAR AND PARALLEL TO THE GROUND.

BRAKED ROLL - CONTINUED

FORWARD GROSS WEIGHT OF 1418 lb.

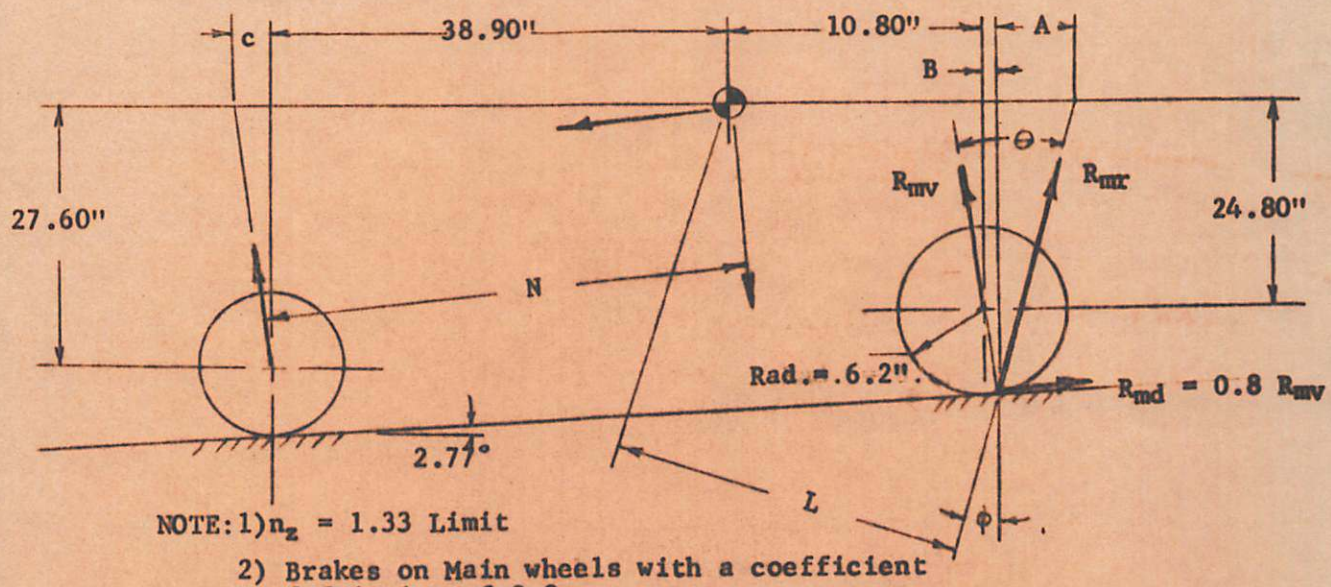

NOTE: 1) n_z = 1.33 Limit

2) Brakes on Main wheels with a coefficient of friction of 0.8

$$\theta = \tan^{-1}\frac{R_{md}}{R_{mv}} = \tan^{-1}0.8 = 38.66^\circ$$

$$\phi = \theta - 2.77^\circ = 38.66^\circ - 2.77^\circ = 35.89^\circ$$

$$B = 6.2 \sin 2.77^\circ = 6.2 \times .04833 = 0.30 \text{ in.}$$

$$A = (24.80 + 6.20 \cos 2.77^\circ) \tan\phi = (24.80 + 6.20 \times .9988)\ .7236 = 22.41 \text{ in.}$$

$$L = (A + B + 10.80) \cos\phi = (22.41 + 0.30 + 10.80)\ .8101 = 27.17 \text{ in.}$$

$$C = 27.60 \tan 2.77^\circ = 27.60 \times .04839 = 1.33 \text{ in.}$$

$$N = (38.90 + C) \cos 2.77^\circ = (38.90 + 1.33) \times .9988 = 40.20 \text{ in.}$$

$$\Sigma F_v = 0 = n W + R_{mv} + R_{nw}$$

$$1.33 \times 1418 = R_{mv} + R_{nv}$$

$$1887 = R_{mv} + R_{nv} \quad (1)$$

$$\Sigma M_{cg} = 0 = L R_{mr} - N R_{nv} = 27.17 R_{mr} - 40.22 R_{nv}$$

$$R_{mr} = 1.48 R_{nv} \quad (2)$$

BRAKED ROLL - CONT'D.

FORWARD GROSS WEIGHT - CONT'D.

BY GEOMETRY:

$R_{mv} = R_{mr} \cos\theta = .7809\ R_{mr}$ (3)

$R_{md} = R_{mr} \sin\theta = .6247\ R_{mr}$ (4)

SOLVING EQUATIONS (1), (2), (3), and (4) GIVES:

R_{nv} = 875 lb.

R_{mr} = 1294 lb/2 WHEELS

R_{mv} = 1010 lb/2 WHEELS

R_{md} = 808 lb/2 WHEELS

THE ABOVE LOADS ARE APPLIED AS FOLLOWS:

NOSE WHEEL: AT THE AXLE

MAIN WHEELS : VERTICAL LOAD THRU AXLE DRAG LOAD AT THE GROUND

ALL LOADS ARE PERPENDICULAR AND PARALLEL TO THE GROUND

SIDE LOAD (DRIFT) CONDITION CAM 3.249

NOTE: 1) LEVEL ATTITUDE, MAIN WHEELS ONLY CONTACT GROUND

2) MOST FORWARD WEIGHT CONDITION OF 1233 lb.

3) $n_z = 1.33$, $n_y = 0.83$

4) 0.50 W ACTING INBOARD ON ONE SIDE AND o.33 W ACTING OUTBOARD ON THE OTHER SIDE.

5) SAME GEOMETRY AS BRAKED ROLL.

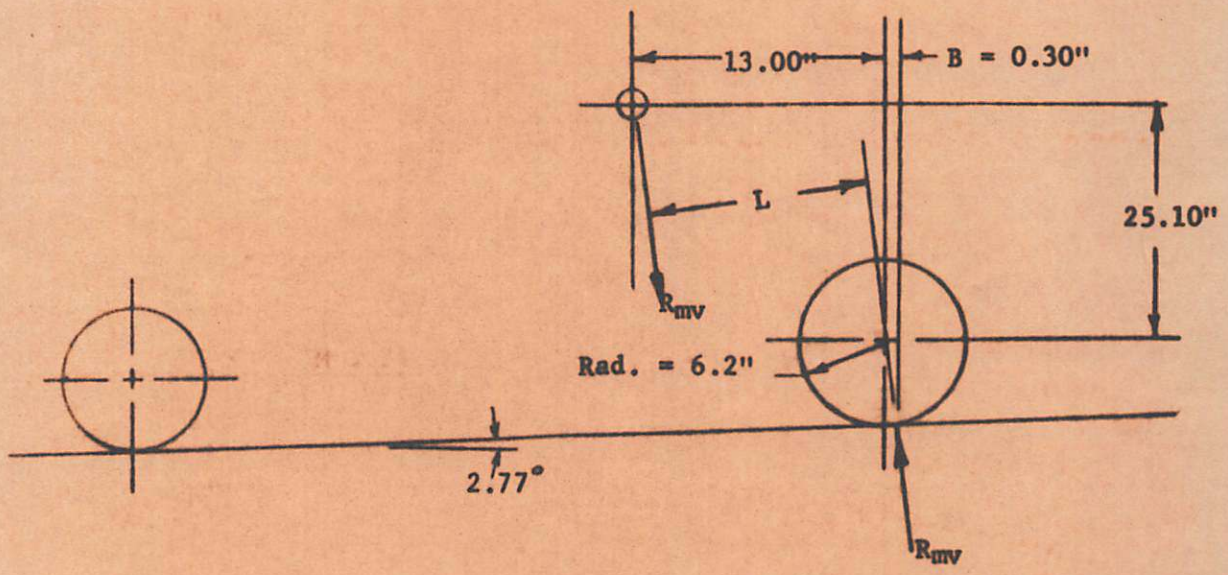

$R_{mv} = n_z W = 1.33 \times 1233 = 1641$ lb. /2 WHEELS

R_{ms} = (inb'd) = 0.50 W = 0.50 x 1233 = 616 lb.

R_{ms} = (outb'd) = 0.33 W = 0.33 x 1233 = 407 lb.

L = (13.00 - 25.10 tan 2.77) cos 2.77 = (13.00 - 25.10 x .04839) .9988

L = 11.78 IN.

VERTICAL LOAD APPLIED THRU AXLE, SIDE LOAD APPLIED AT GROUND CONTACT POINT. ALL LOADS ARE PERPENDICULAR AND PARALLEL TO GROUND.

SIDE LOAD (DRIFT) CONDITION - CONT'D.

MOST FOWARD WEIGHT CONDITION - CONT'D.

UNBALANCED MOMENTS ABOUT C.G

$$M_{ycg} = L.R_{mv} = 11.78 \times 1641 = 19{,}320 \text{ in-lb.}$$

$$I_y = 8{,}900 \text{ in-lb-sec}^2$$

$$\alpha_y = M_{ycg}/I_y = 19{,}320/8900 = \underline{2.71 \text{ rad/sec}^2}$$

$$M_{xcg} = \left[R_{ms} \text{ (inb'd)} + R_{ms} \text{ (outb'd)}\right]\left[25.10 + 6.2 \cos 2.77^\circ\right]$$

$$M_{xcg} = \left[616 + 407\right]\left[25.10 + 6.2(.9988)\right] = 32{,}000 \text{ in-lb.}$$

$$I_x = 7100 \text{ in-lb-sec}^2$$

$$\alpha_x = M_{xcg}/I_x = 32{,}000/7100 = \underline{4.51 \text{ rad/sec}^2}$$

$$M_{zcg} = \left[R_{ms} \text{ (inb'd)} + R_{ms} \text{ (outb'd)}\right]\left[13.00 + 0.30\right] =$$

$$M_{zcg} = \left[616 + 407\right] 13.30 = 13{,}600 \text{ in-lb}$$

$$I_z = 14{,}400 \text{ in-lb-sec}^2$$

$$\alpha_z = M_{zcg}/I_z = 13{,}600/14{,}400 = \underline{.94 \text{ rad/sec}^2}$$

SIDE LOAD (DRIFT) CONDITION - CONT'D.

NOTE:
1) LEVEL ATTITUDE, MAIN WHEELS ONLY CONTACT GROUND
2) FORWARD GROSS WEIGHT CONDITION OF 1418 lb.
3) $n_z = 1.33$, $n_y = 0.83$
4) 0.50 W ACTING INBOARD ON ONE SIDE AND o.33 W ACTING OUTBOARD ON THE OTHER SIDE.
5) SAME GEOMETRY AS BRAKED ROLL

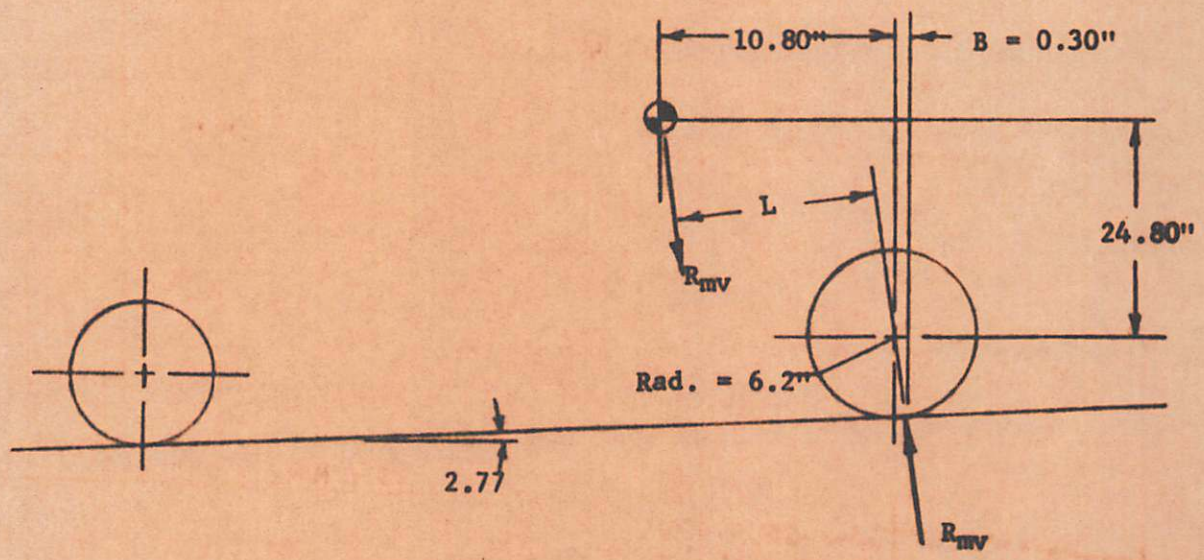

$R_{mv} = n_z W = 1.33 \times 1418 = 1887$ lb/2 WHEELS

R_{ms} (INb'd) = 0.50 W = 0.50 x 1418 = 709 lb.

R_{ms} (Outb'd) = 0.33 W = 0.33 x 1418 = 468 lb.

VERTICAL LOAD APPLIED THRU AXLE, SIDE LOAD APPLIED AT GROUND CONTACT POINT. ALL LOADS ARE PERPENDICULAR AND PARALLEL TO THE GROUND.

$L = (10.80 - 24.80 \tan 2.77^\circ) \cos 2.77^\circ = (10.80 - 24.80 \times .04839).9988$

$L = 9.59$ in.

SIDE LOAD (Drift) CONDITION - CONTINUED

FORWARD GROSS WEIGHT CONDITION - CONT'D.

UNBALANCED MOMENTS ABOUT C.G.

$M_{ycg} = L\ R_{mv} = 9.59 \times 1887 = 18{,}080$ IN-LB.

$I_y = 8{,}900$ IN-LB-SEC.^{2}

$\alpha_y = M_{ycg}/I_y = 18{,}080/8900 = \underline{2.03\ \text{RAD/SEC}^2}$

$M_{xcg} = \left[R_{ms}\ (\text{Inb'd}) + R_{ms}\ (\text{Outb'd})\right]\left[24.80 + 6.2 \cos 2.77^\circ\right]$

$M_{xcg} = \left[709 + 468\right]\left[24.80 + 6.2\ (.9988)\right] = 36{,}400$ IN-LB.

$I_x = 7100$ IN-LB-SEC^2

$\alpha_x = M_{xcg}\ /\ I_x = 36{,}400/7100 = \underline{5.12\ \text{RAD/SEC}^2}$

$M_{zcg} = \left[R_{ms}\ (\text{Inb'd}) + R_{ms}\ (\text{Outb'd})\right]\left[10.80 + 0.30\right] = \left[709 + 468\right]\ 11.10 = 13{,}050$ IN-LB.

$I_z = 14{,}400$ IN-LB-SEC^2

$\alpha_z = M_{zcg}\ /\ I_z = 13{,}050/14{,}400 = \underline{0.91\ \text{RAD/SEC}^2}$

SUPPLEMENTARY NOSEWHEEL CONDITIONS CAM 3.253

COMPARISON OF MOST FORWARD C.G. AND FORWARD GROSS C.G.
FOR MAXIMUM STATIC NOSE GEAR REATCION
(REF. SKETCH PAGE 72)

TAKE $\sum M$ @ MAIN GEAR AXLE, AND FOR PURPOSES OF THIS CHECK, ASSUME GRAVITY ACTING PARALLEL TO THE FUSELAGE STATION LINES.

FORWARD GROSS C.G.:

M = 1418 (10.80) = 15,300 in-lb.

MOST FWD. C.G.

M = 1233 (13.00) = 16,020 in-lb.

FOR SUPPLEMENTARY NOSEWHEEL CONDITIONS MOST FORWARD C.G. CONDITION IS CRITICAL

SUPPLEMENTARY NOSEWHEEL CONDITIONS - CONT'D.

NOTE 1) MOST FORWARD WEIGHT CONDITION OF 1233 lb.

2) AFT LOAD: VERTICAL = 2.25 x STATIC, DRAG = 0.8 x VERTICAL

3) FWD. LOAD: VERTICAL = 2.25 x STATIC, FWD. = 0.4 x VERTICAL

4) SIDE LOAD: VERTICAL = 2.25 x STATIC, SIDE = 0.7 x VERTICAL

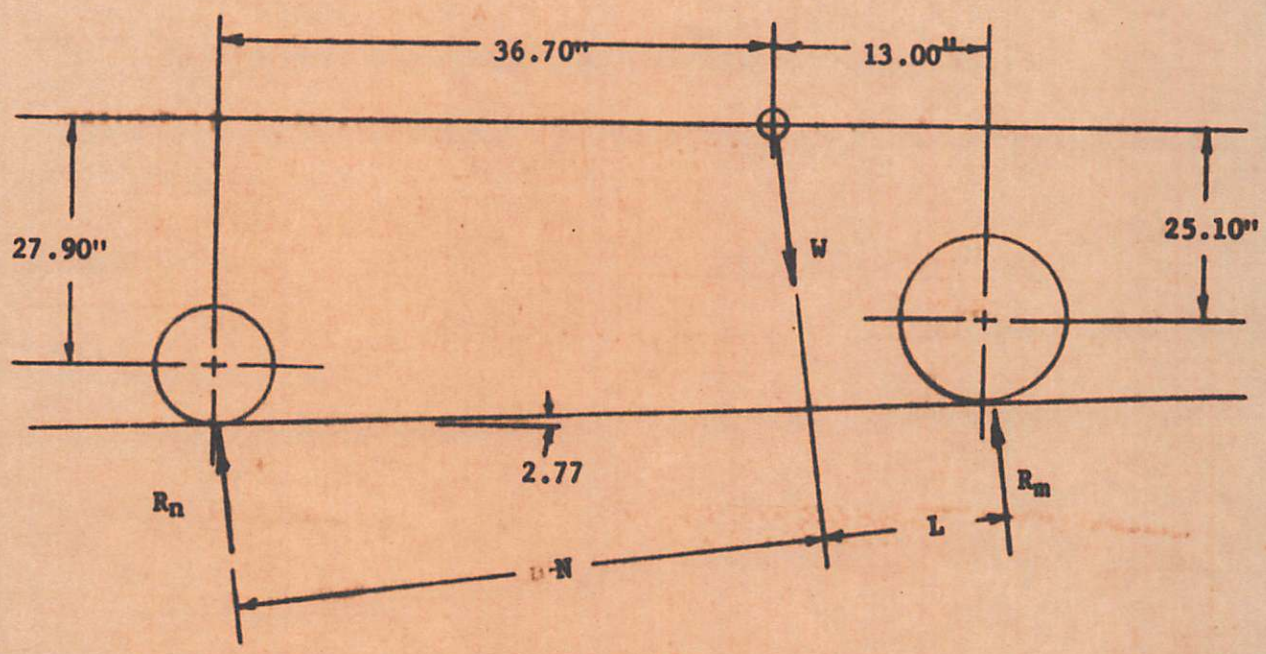

$N = (36.70 + 27.90 \tan 2.77) \cos 2.77^\circ = (36.70 + 27.90 \times .04839).9988 = 38.00$ in.

$L = (13.00 - 25.10 \tan 2.77) \cos 2.77^\circ = (13.00 - 25.10 \times .04839).9988 = 11.78$ in.

$R_n = L\,W / L + N = 11.78 \times 1233/(11.78 + 38.00) = 292$ lb. (Static)

AFT LOAD: (LIMIT FORCE COMPONENTS AT AXLE NORMAL AND PARALLEL TO GROUND)

R_n (Vert.) = 2.25 R_n = 2.25 x 292 = 656 lb.

R_n (Drag) = 0.80 R_n (Vert) = 0.80 x 656 = 525 lb.

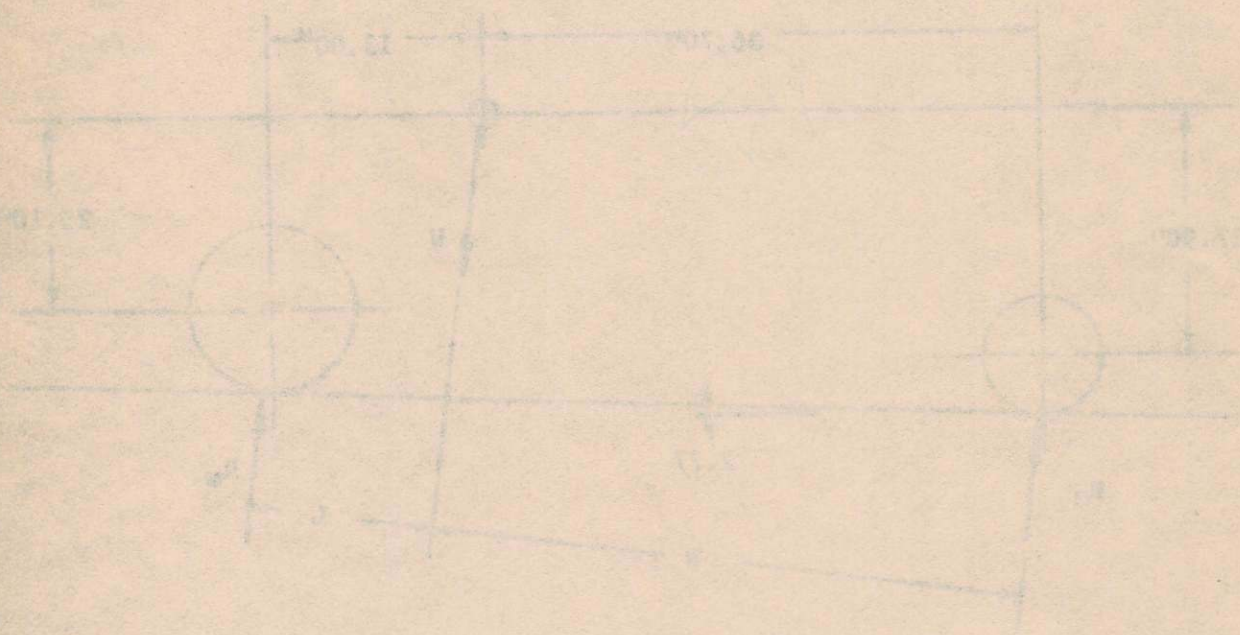

SUPPLEMENTARY NOSEWHEEL CONDITIONS - CONT'D.

FORWARD LOAD: (LIMIT FORCE COMPONENTS AT AXLE NORMAL AND PARALLEL TO GROUND)

R_n (Vert.) = 2.25 R_n = 2.25 x 292 = 656 lb.

R_n (Fwd.) = 0.40 R_n (Vert.) = 0.40 x 656 = 262 lb.

SIDE LOAD: (LIMIT FORCE COMPONENTS AT GROUND CONTACT NORMAL AND PARALLEL TO GROUND)

R_n (Vert.) = 2.25 R_n = 2.25 x 292 = 656 lb.

R_n (Side) = 0.70 R_n (Vert.) = 0.70 x 656 = 459 lb.

TIRE RATING CAM 3.362

MAIN WHEEL:

MAXIMUM STATIC LOAD IS FOR MOST AFT GROSS WEIGHT OF 1418 lb.

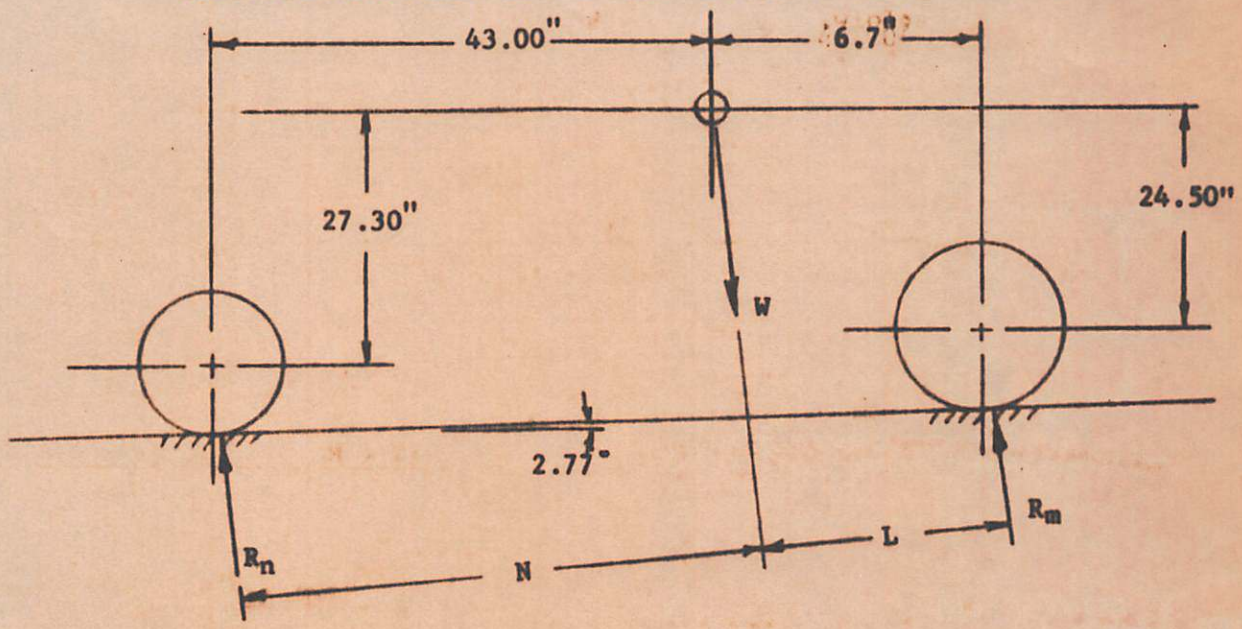

$N = (43.00 + 27.30 \tan 2.77^\circ) \cos 2.77^\circ = (43.00 + 27.30 \times .04839).9988 = 44.27$ in.

$L = (6.70 - 24.50 \tan 2.77^\circ) \cos 2.77^\circ = (6.70 - 24.50 \times .04839).9988 = 5.51$ in.

$R_m = N\,W/(L + N) = 44.27 \times 1418/(44.27 + 5.51) = 1261$ lb/2 WHEELS

or 630 lb. EACH

THE STATIC RATING OF THE 15 x 6.00 - 6 TYPE VI 4 PLY TIRE IS 1250 lb.
THEREFORE, THIS TIRE OR ONE HEAVIER IS ADEQUATE FOR THE MAIN WHEEL

NOSE WHEEL:

NOTE: 1) n (Down) = 1.0

2) n (Fwd) = 0.31

MOST FORWARD WEIGHT OF 1233 lb:

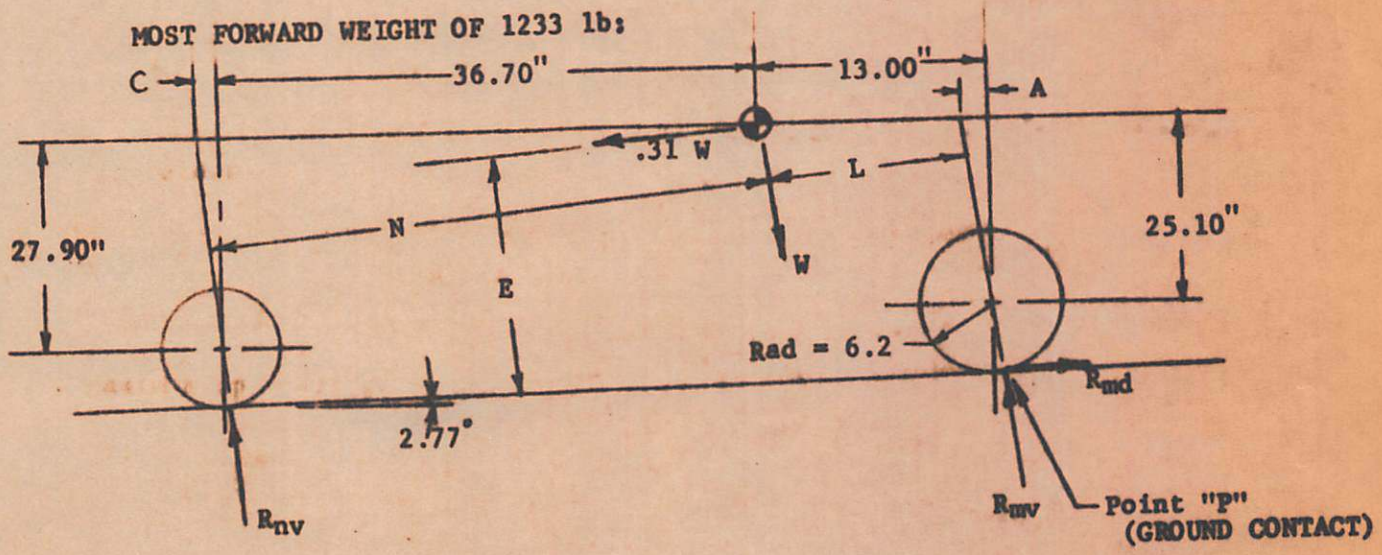

$A = 25.10 \tan 2.77° = 25.10 \times .04839 = 1.21$ IN.

$L = (13.00 - A) \cos 2.77° = (13.00 - 1.21).9988 = 11.77$ IN.

$C = 27.90 \tan 2.77° = 27.90 \times .04839 = 1.35$ IN.

$N = (36.70 + C) \cos 2.77° = (36.70 + 1.35).9988 = 38.01$ IN.

$E = 6.20 + \frac{25.10}{\cos 2.77°} + L \tan 2.77° = 6.20 + \frac{25.10}{.9988} + (11.77 \times .04839)$

$E = 31.89$ IN

$$\sum M_p = 0 = WL + .31\,WE - R_{nv}(N + L)$$

$$R_{nv} = \frac{WL + .31\,WE}{N + L}$$

$$R_{nv} = \frac{(1233 \times 11.77) + (.31 \times 1233 \times 31.89)}{38.01 + 11.77}$$

$$R_{nv} = \underline{537 \text{ lb.}}$$

TIRE RATING - CONTINUED

NOSE WHEEL - CONTINUED

FORWARD GROSS WEIGHT OF 1418 lb.

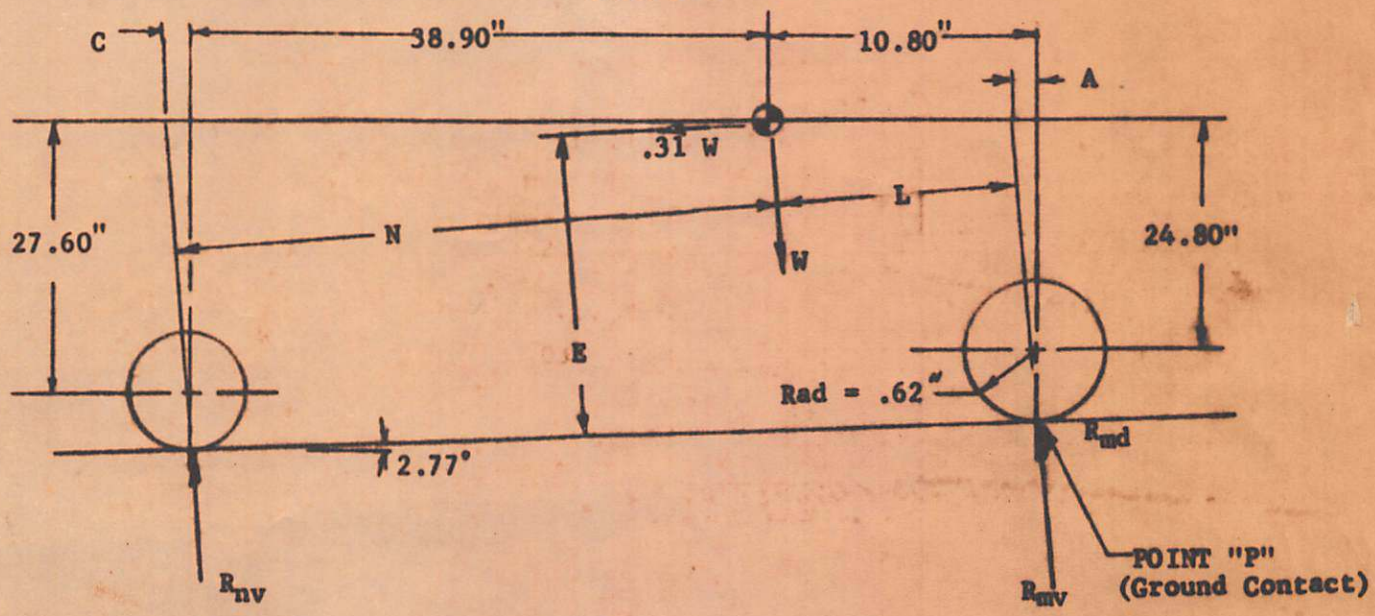

$A = 24.80 \tan 2.77^\circ = 24.80 \times .04839 = 1.20$ IN.

$L = (10.80 - A) \cos 2.77^\circ = (10.80 - 1.20).9988 = 9.59$ IN.

$C = 27.60 \tan 2.77^\circ = 27.60 \times .04839 = 1.33$ IN.

$N = (38.90 + C) \cos 2.77^\circ = (38.90 + 1.33).9988 = 40.20$ IN.

$E = 6.20 + \frac{24.80}{\cos 2.77} + L \tan 2.77^\circ = 6.20 + \frac{24.80}{.9988} + 9.59 \times .04839$

$E = 31.50$ IN.

$$M = 0 = WL + .31\,WE - R_{nv}(N + L)$$

$$R_{nv} = \frac{WL + .31\,WE}{N + L}$$

$$R_{nv} = \frac{(1418 \times 9.59) + (.31 \times 1418 \times 31.50)}{40.20 + 9.59}$$

$$R_{nv} = \underline{552 \text{ lb.}}$$

THE DYNAMIC RATING OF THE 5.00 - 5, TYPE III, 4 PLY TIRE IS 1160 lb. THEREFORE, THIS TIRE OF ONE HEAVIER IS ADEQUATE FOR THE NOSE WHEEL.